C2430R ∅24.4mm*30.8mm, 贵金属电刷 Precious Metal Brushes

应用领域 : 安防、小型电子产品、飞机类遥控玩具、个人护理产品、便携工具等领域。

Applications: security equipment, small electronic products, remote control model aircraft, personal care products, portable electric tools, etc.

电机参数 / Motor Data

				23-0021	43-0010	44-0039
1	电压	Voltage	V	24.0	12.0	3.7
2	端电阻	Terminal resistance	Ω	260	11	0.8
3	空载转速	No-load speed	rpm	2500	6150	6350
4	空载电流	No-load current	mA	4	35	130
5	堵转转矩	Stall torque	mNm	6.53	16.1	23.5
6	堵转电流	Stall current	mA	107	978	4683
7	负载转矩	Load torque	mNm	1.96	1.96	1.96
8	负载转速	Load speed	rpm	1750	5400	5820
9	负载电流	Load current	mA	35	150	510
10	最大输出功率	Max. output power	W	0.43	2.59	3.91
11	最大效率	Max. efficiency	%	46.7	62.5	66.3
12	反电势常数	Back-EMF constant	mV/rpm	9.18	1.89	0.57
13	转矩常数	Torque constant	mNm/A	63.19	17.07	5.16
14	转速 / 转矩斜率	Speed/torque gradient	rpm/mNm	383	382	270
15	压敏电阻	Varistor	Yes/No	Yes	Yes	Yes
16	重量	Weight	g	12.6	14.5	12.8
17	工作温度范围	Operating temperature range	°C	-20~+80		

特性曲线 /Characteristics Curve

C2430R43-0010

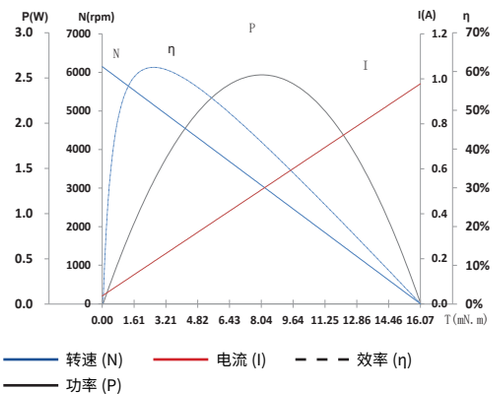

仅供参考，详细了解请以产品规格书为准。

For reference only, please refer to the product specification.

可选配置 / Options

齿轮箱 : 正齿轮 齿轮组主要技术指标详见第 159 页

Gearbox: spur gearbox the main technical parameters are detailed on page 159

性能 Special coils: 连续运行范围内可定制 customizable in continuous operation range

法兰 Flange: 标准前后法兰 standard front and rear flanges / 定制法兰 custom flanges

轴 Shaft: 长度 length / 异形 shape

电气连接 Electrical connection: 端子或导线 connector or wire / 导线长度 lead wires length
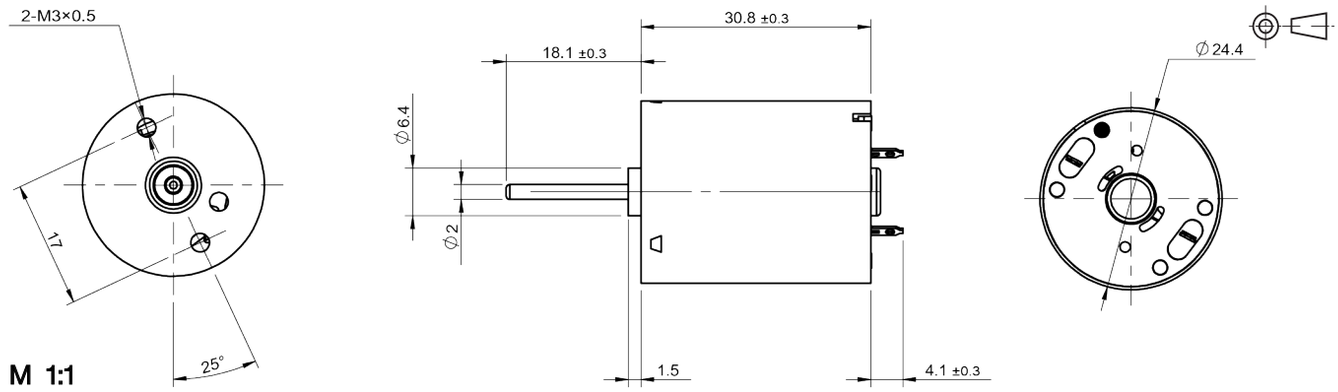
外观图 /Outline Drawing